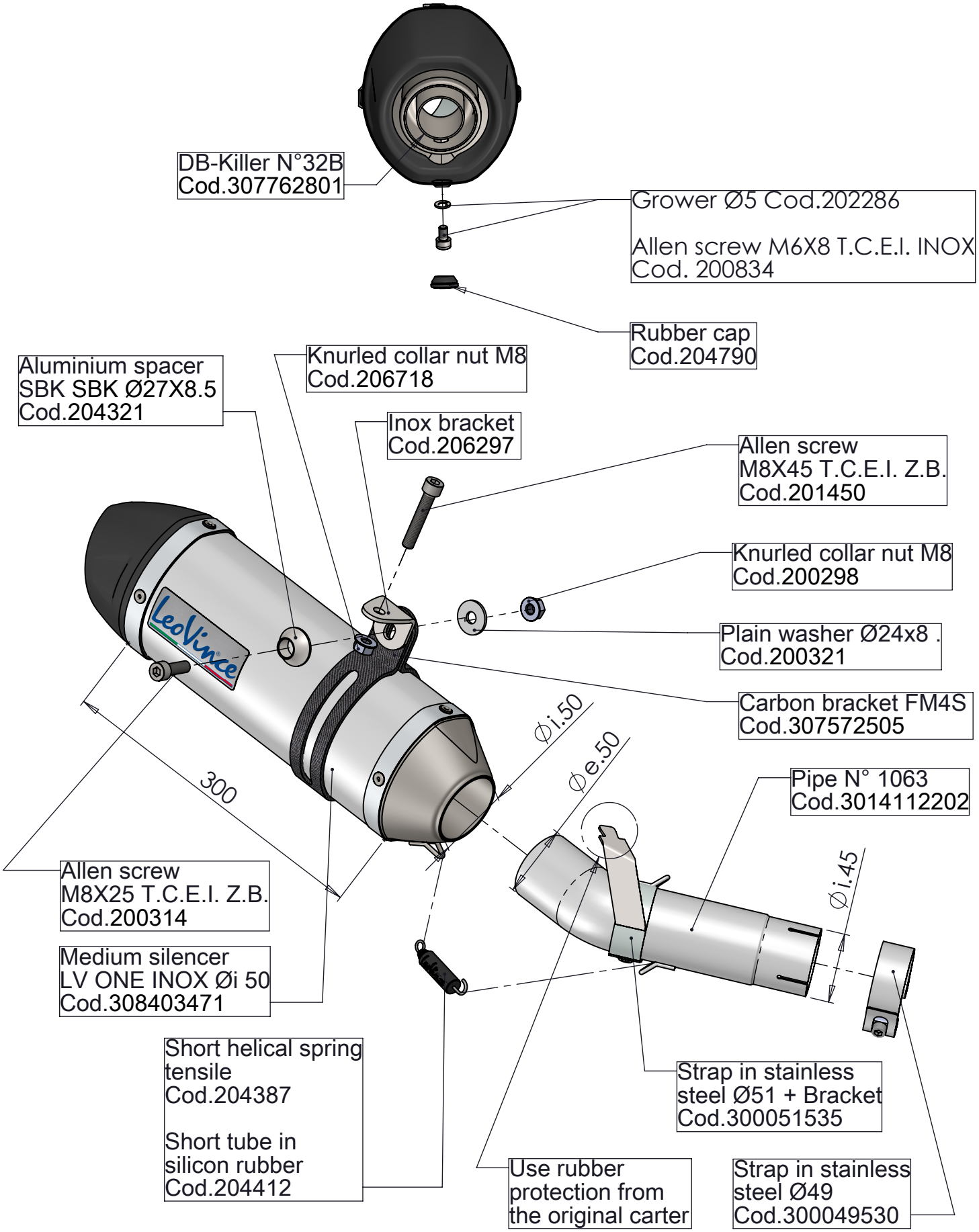

Art. 14112

SUZUKI GSX-S 1000 i.e./ GSX-S 1000 F i.e. ('15)

Slip-on "LV ONE MEDIO" -INOX- Passaggio STANDARD
OMOLOGATO "EVOLUTION II"