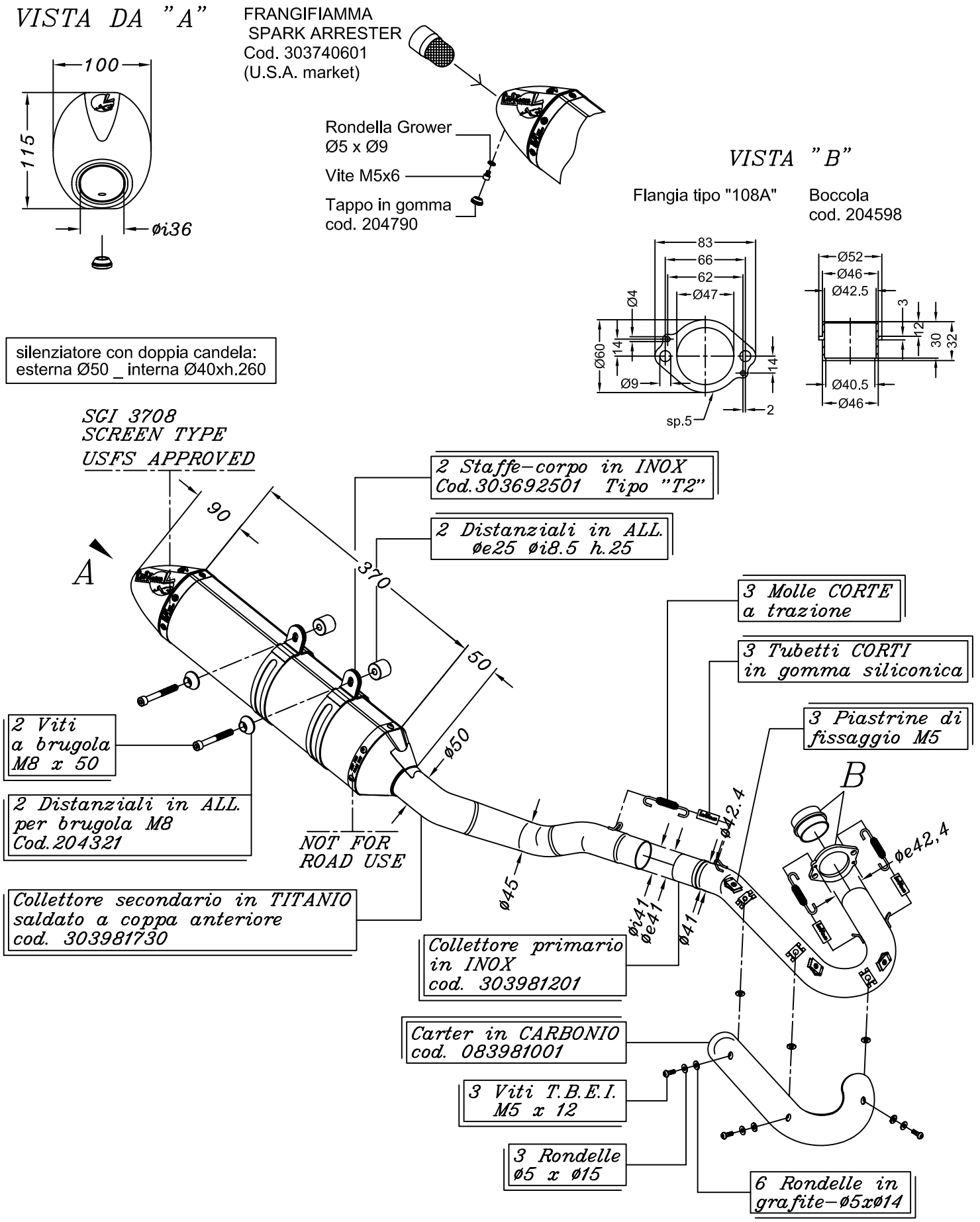

YAMAHA YFZ 450 ('04/'08)
YAMAHA YFZ 450 ('07 - limited edition)
YAMAHA YFM 450 ('08)

Art.3981C Impianto completo <<X3>> ATV/QUAD SPORT - Full TITANIUM