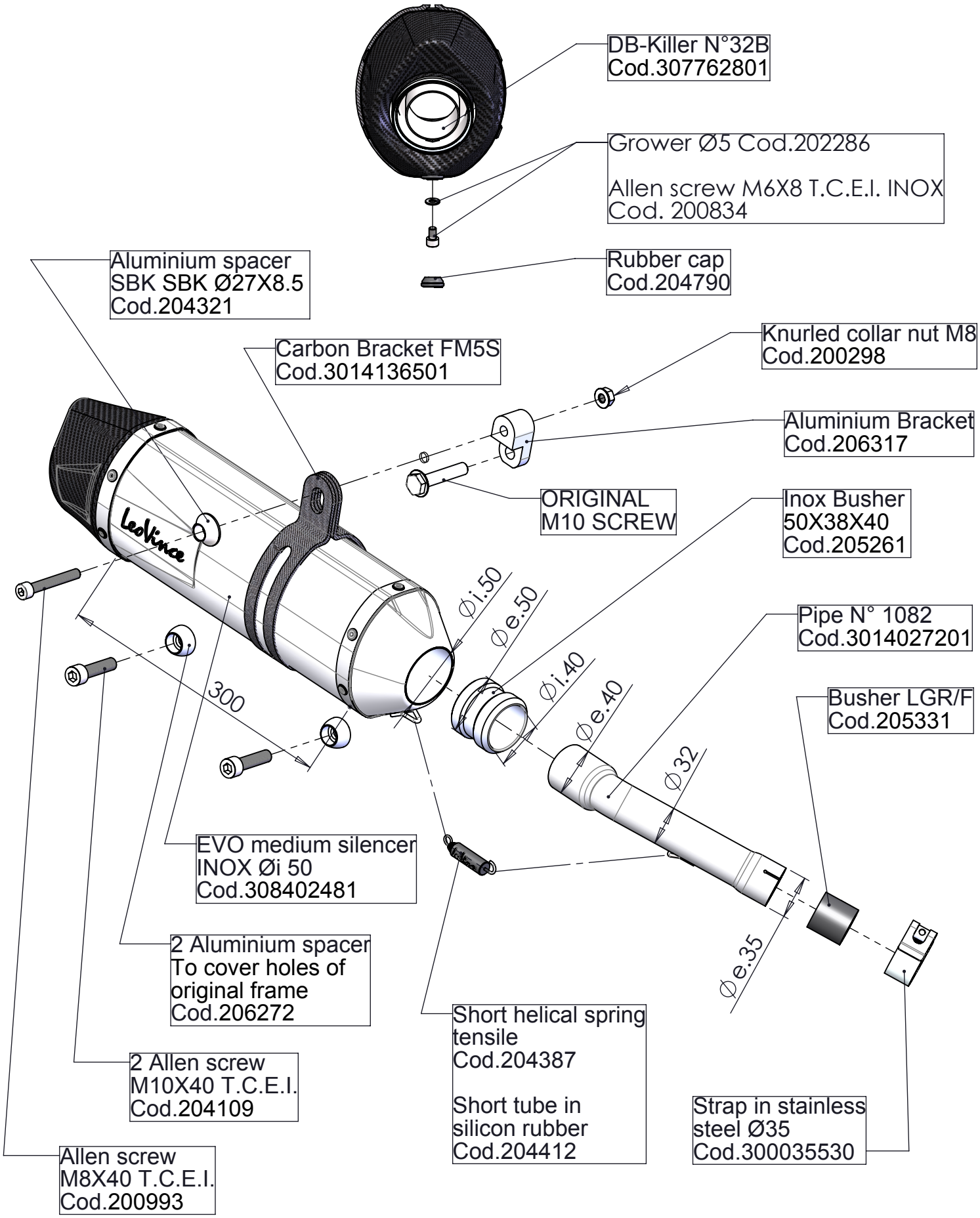

Art. 14136E

YAMAHA TRICITY 125 '14/'16

Slip-on "LV ONE EVO INOX " - MEDIUM - Passaggio STANDARD
OMOLOGATO "EVOLUTION II"