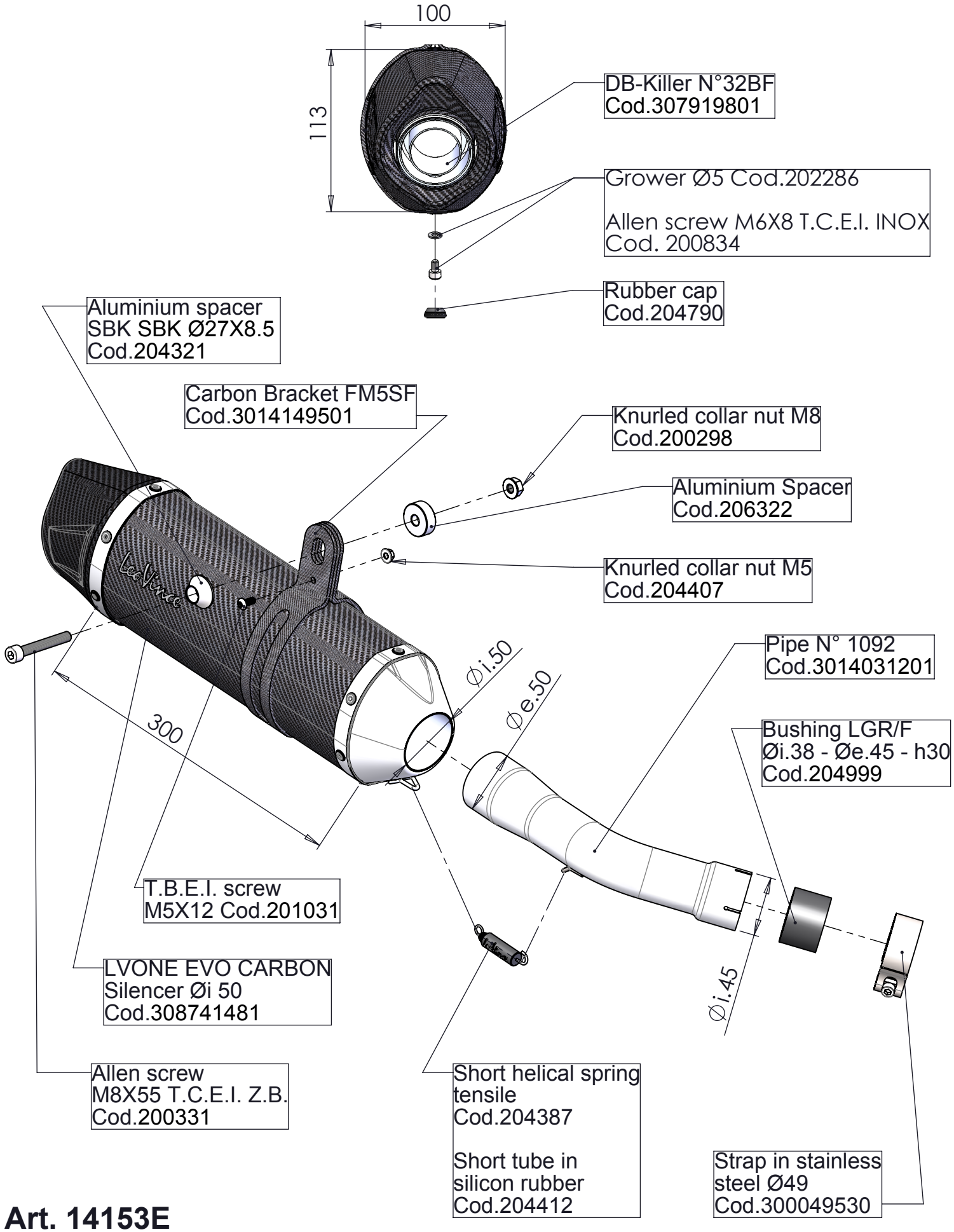

Art. 14153E

SUZUKI SV 650 ('16)

Slip-on LV ONE EVO CARBONIO - Passaggio STANDARD OMOLOGATO "EVOLUTION II"