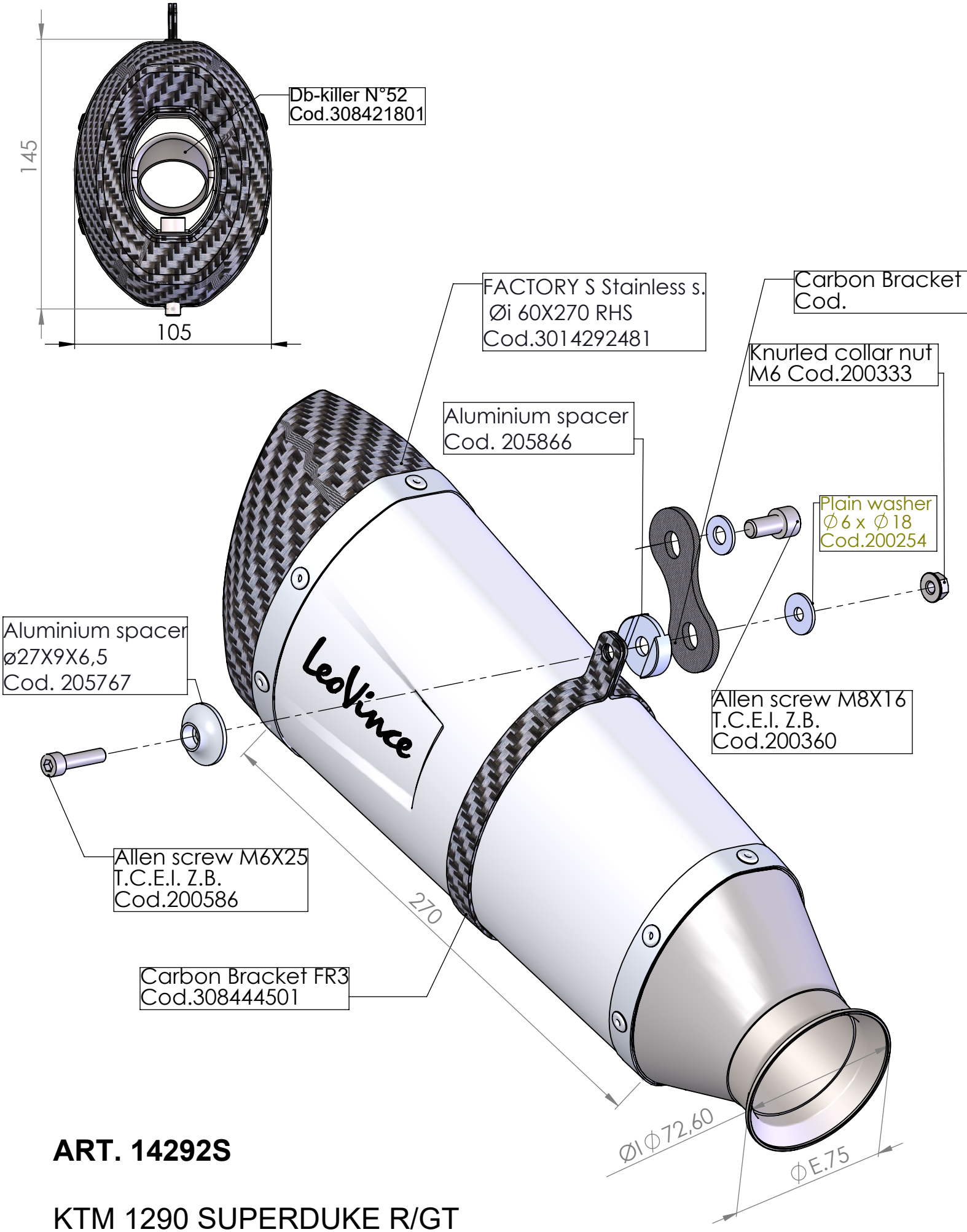

ART. 14292S

KTM 1290 SUPERDUKE R/GT

SLIP-ON - Factory S - STAINLESS S.