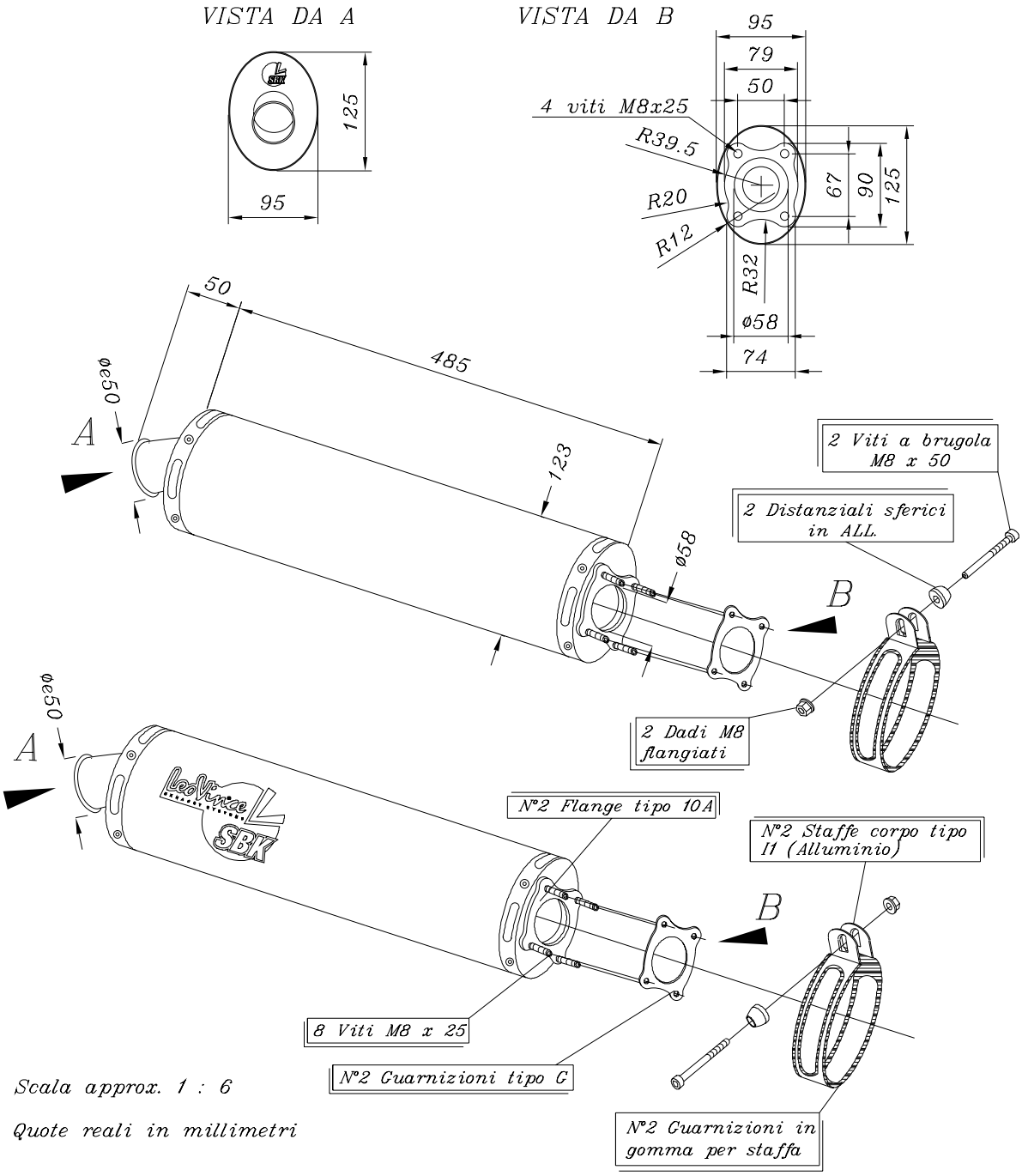

ART. 6787 SUZUKI SV 1000 i.e. ('03)

BOLT-ON Racing Alluminio ovale