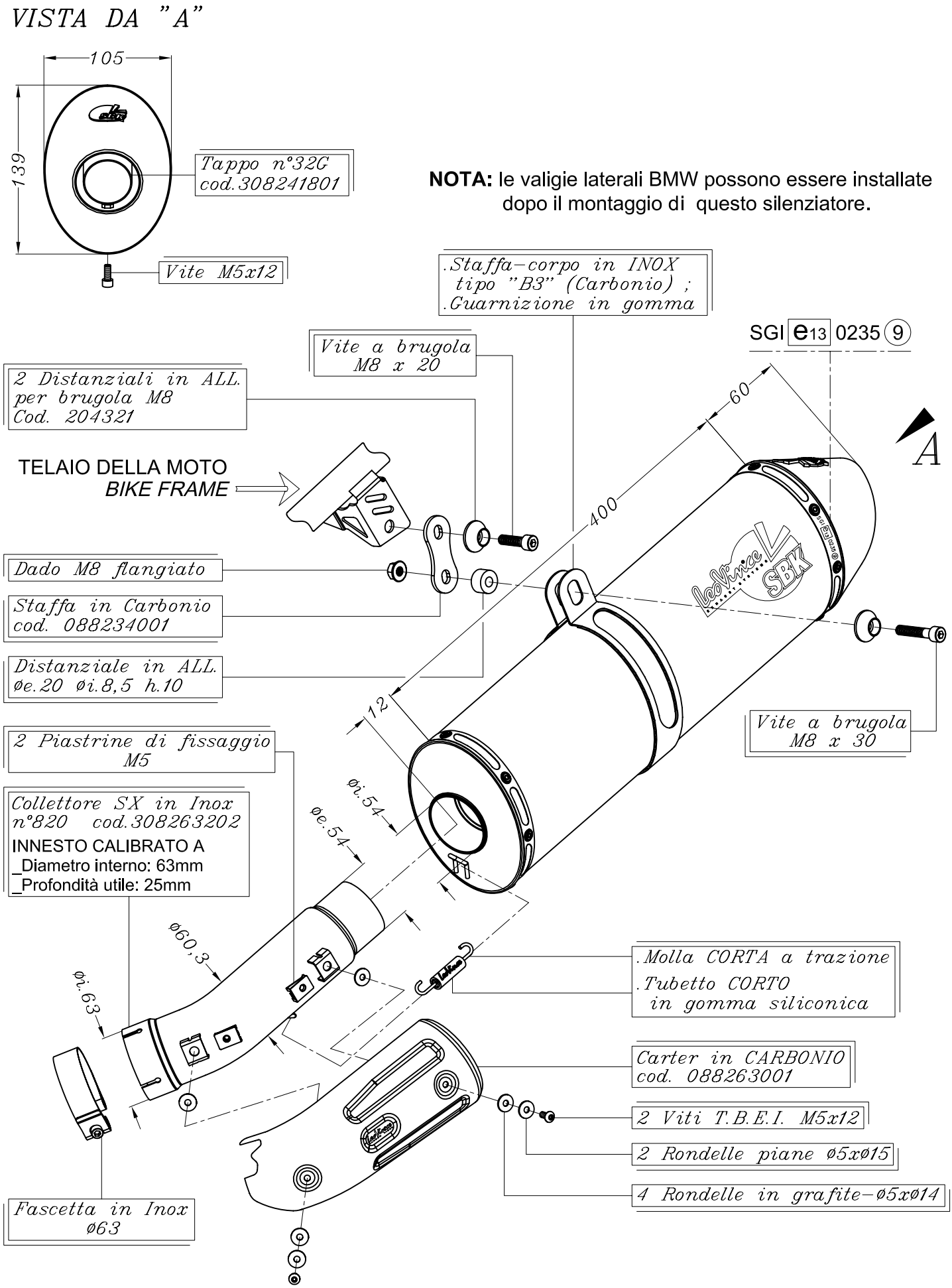

BMW R 1200 GS i.e. ('10)

Art.8263 Slip-on SBK <<BIG>> OVALE - CARBONIO - Pass. STANDARD OMOLOGATO "EVOLUTION II"