VISTA DA "A"

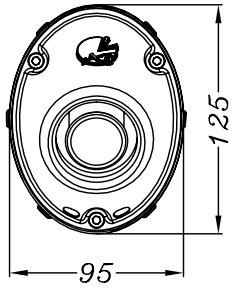

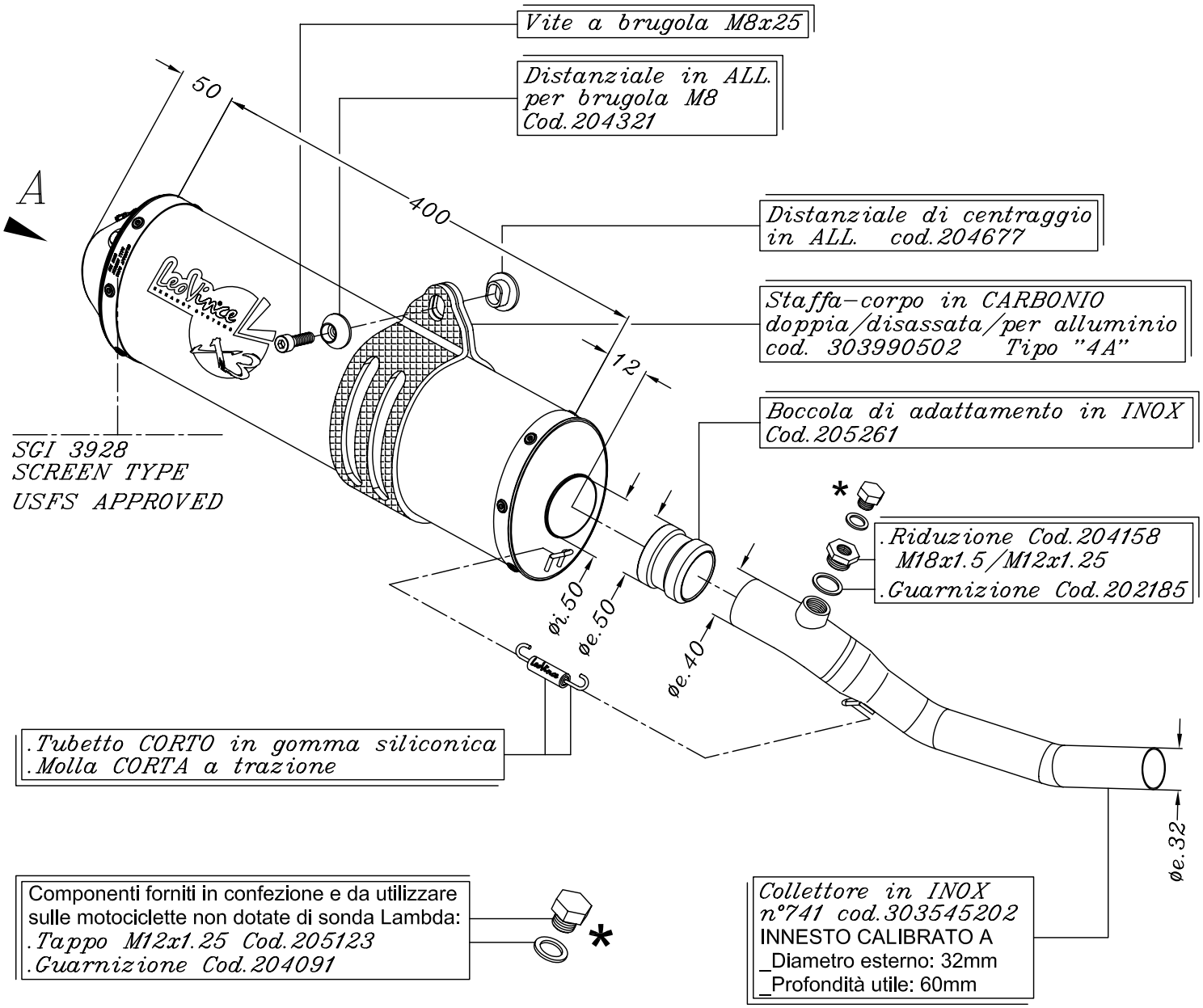

KAWASAKI KLX 250 ('09)

Art.3545 Slip–on <<X3>> ENDURO – ALLUMINIO