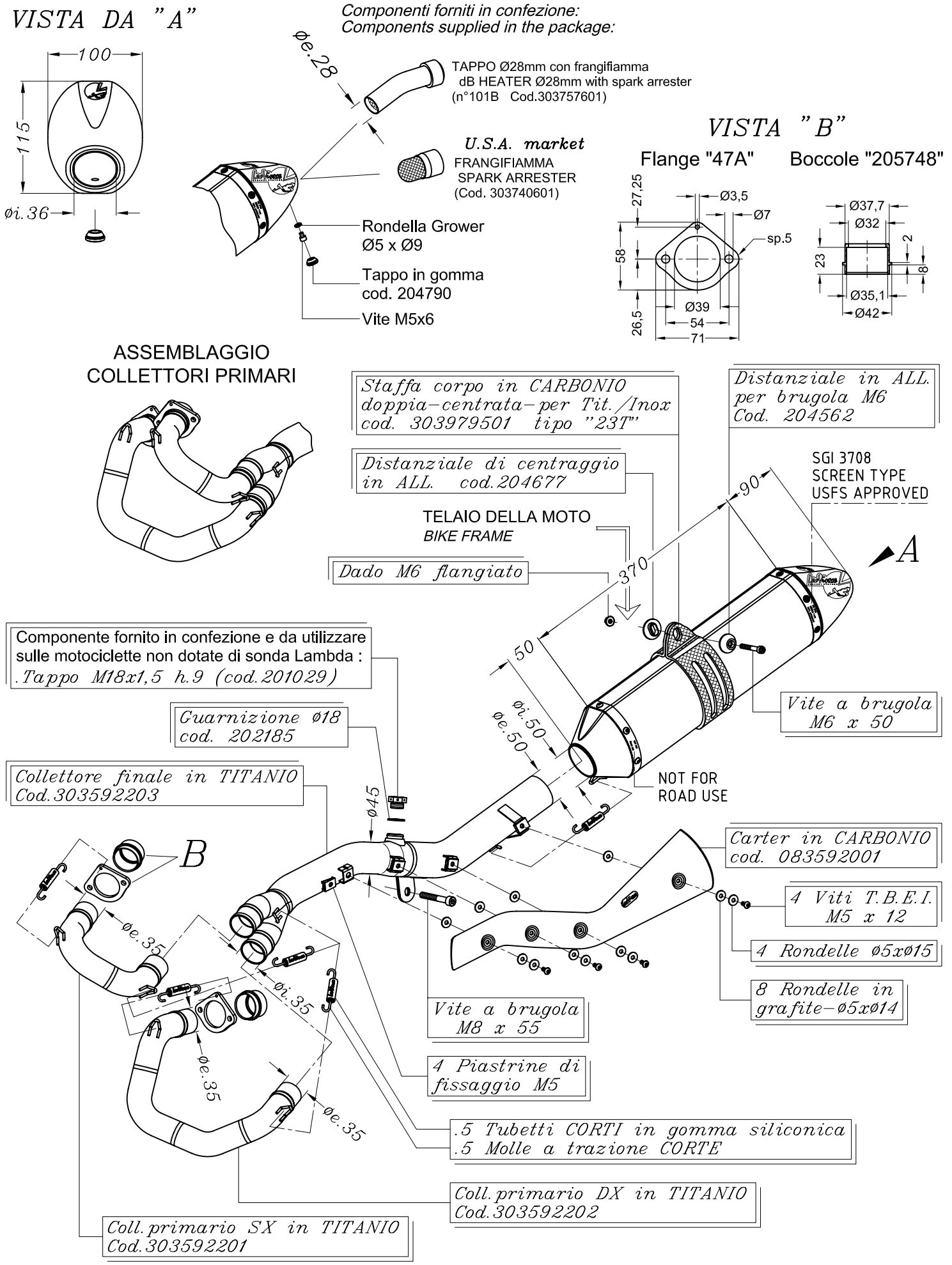

HUSQVARNA TE 630 i.e. ('10) – SMS 630 i.e. ('10)

Art.3592

Impianto completo <<X3>> 2/1 MOTOCROSS/SUPERMOTO – Full TITANIUM