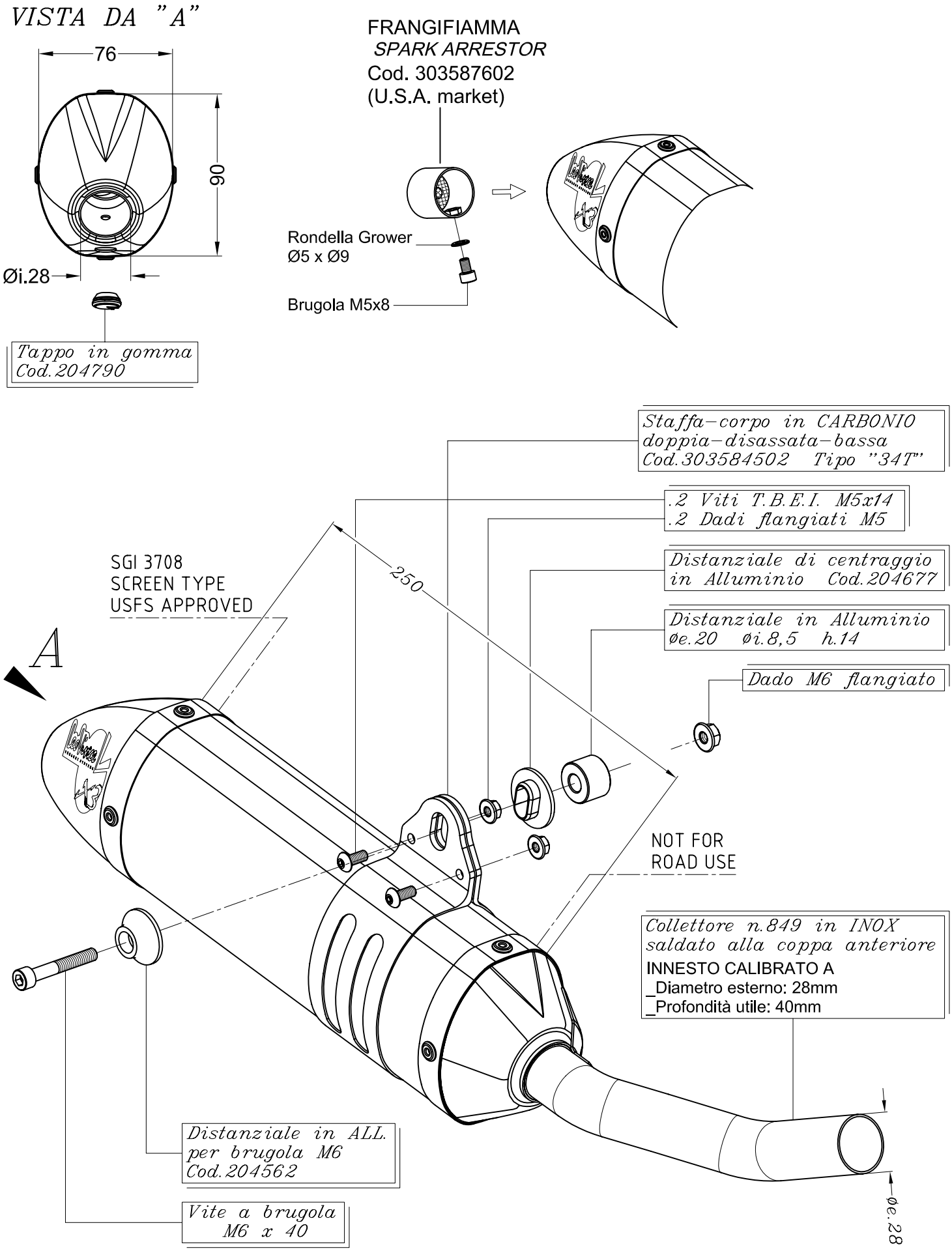

SUZUKI RM 125 ('03/'10)

ART.3598 Slip-on <<X3>> 2 TEMPI - INOX