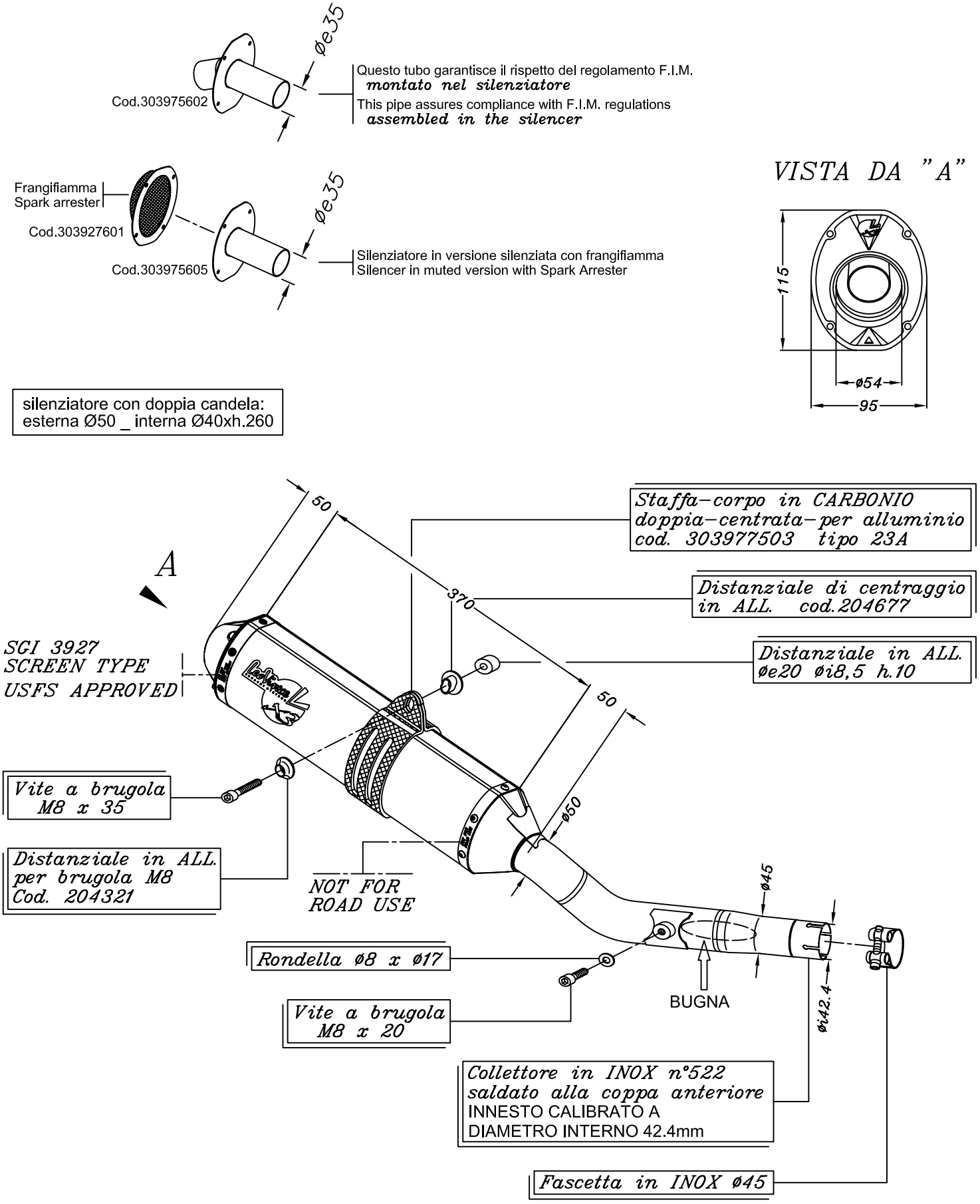

SUZUKI RM-Z 250 ('07/'08)

Art.3603 Slip-on <<X3>> MOTOCROSS/SUPERMOTO - ALLUMINIO