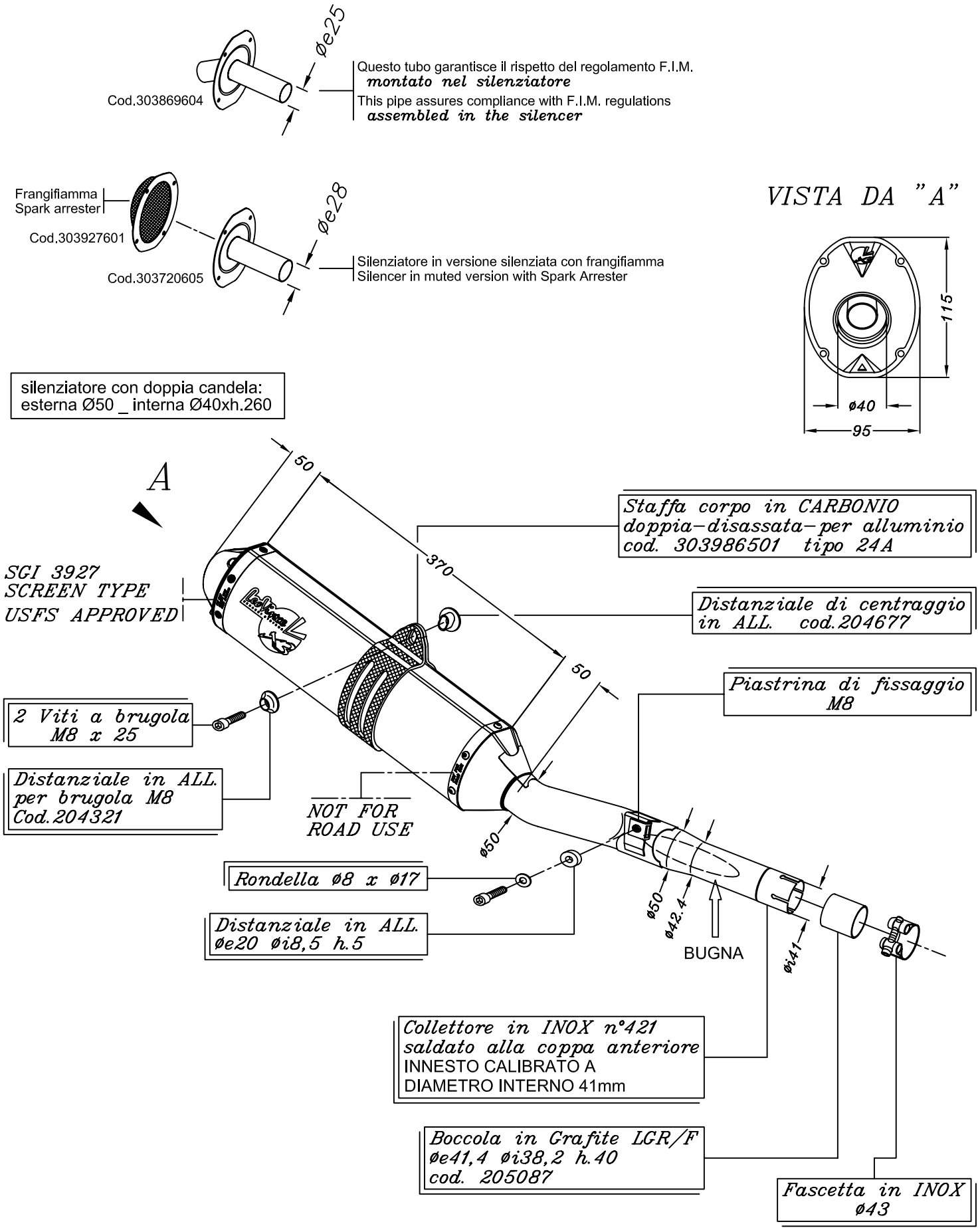

KAWASAKI KLX 450 R ('07/'08)

Art.3612 Slip-on <<X3>> ENDURO SPORT - ALLUMINIO