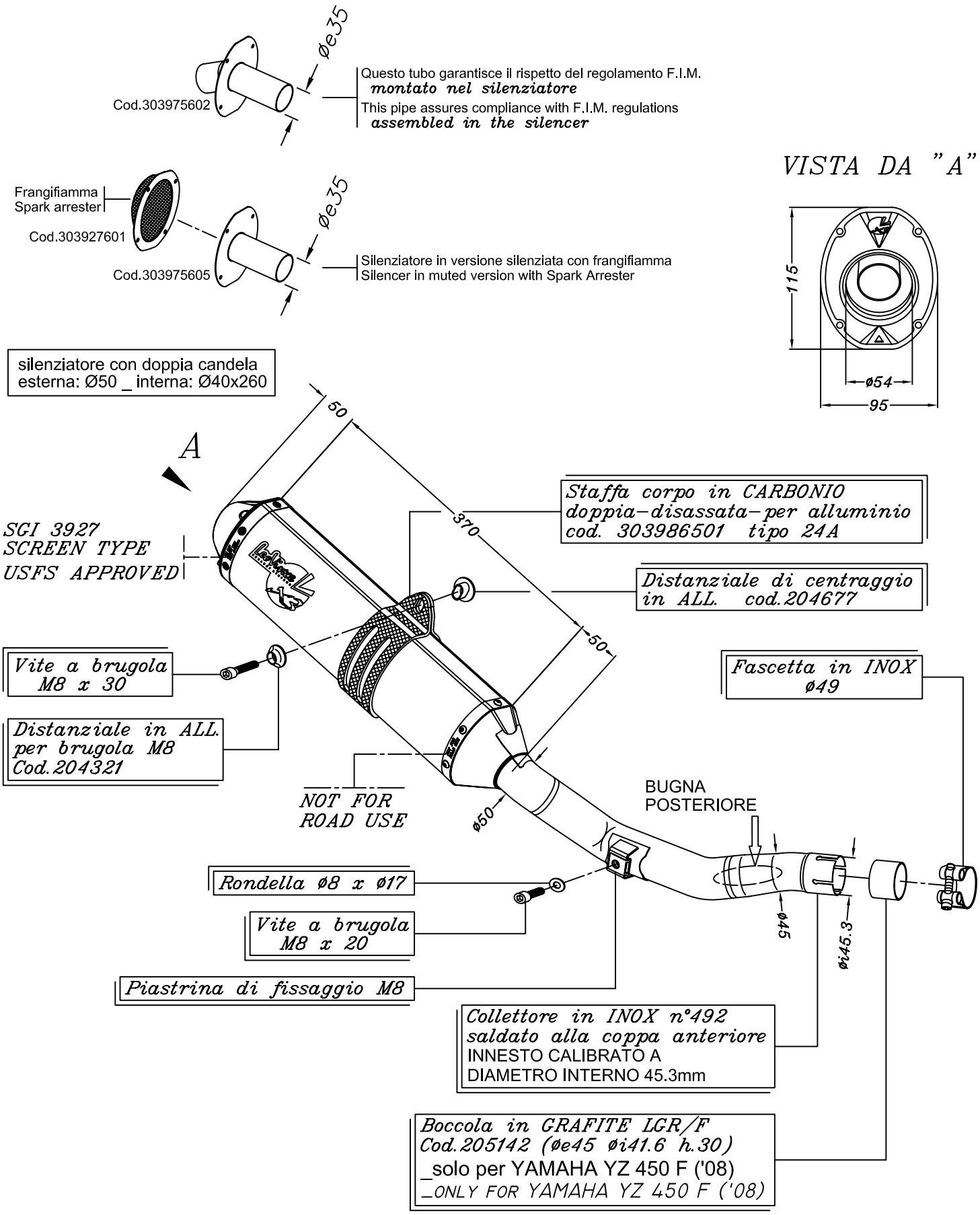

YAMAHA YZ 450 F ('07/'08)

Art.3659 Slip-on <<X3>> MOTOCROSS/SUPERMOTO - ALLUMINIO