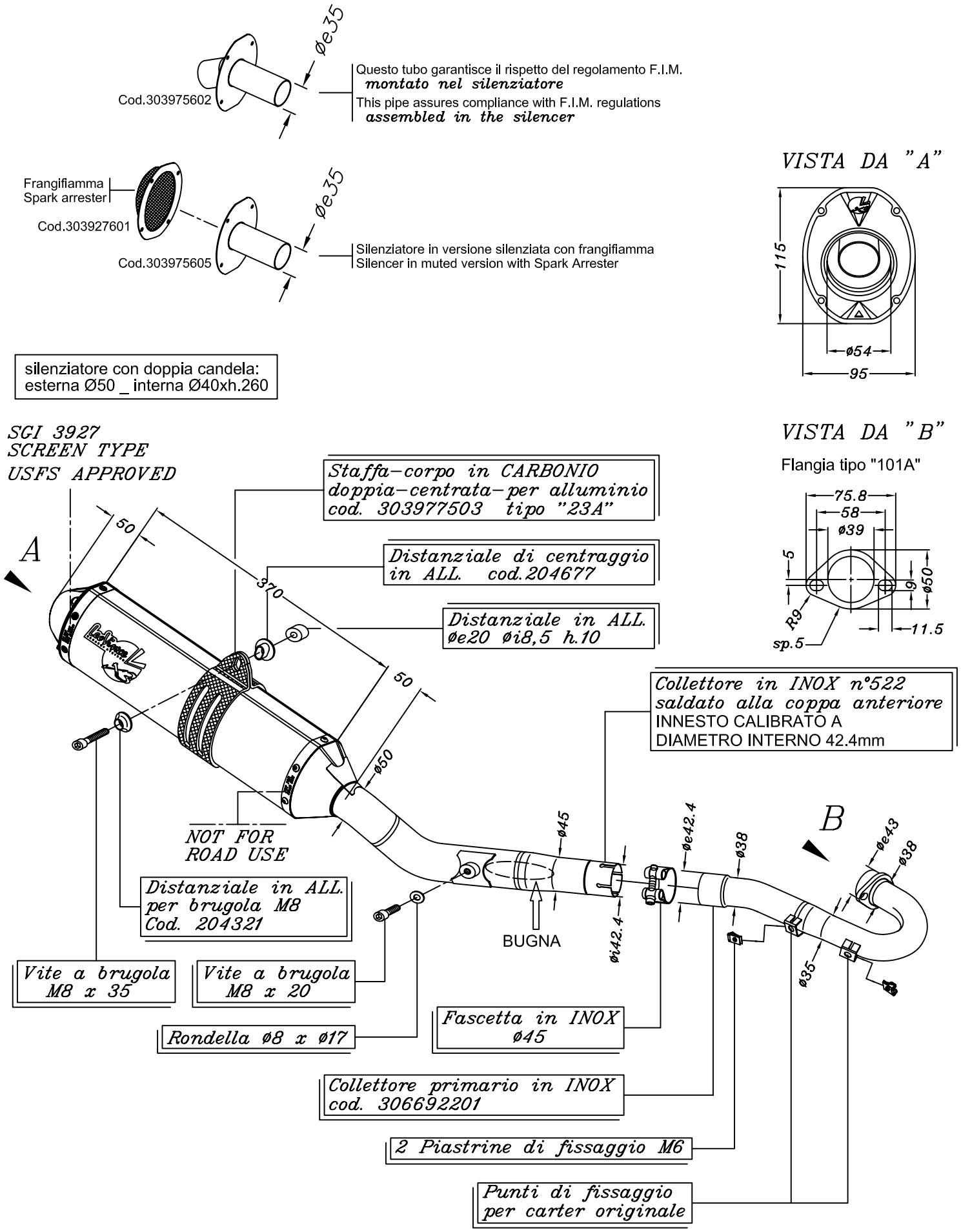

SUZUKI RM-Z 250 ('07/'08)

Art.3674

Impianto completo <<X3>> MOTOCROSS/SUPERMOTO
INOX/ALLUMINIO