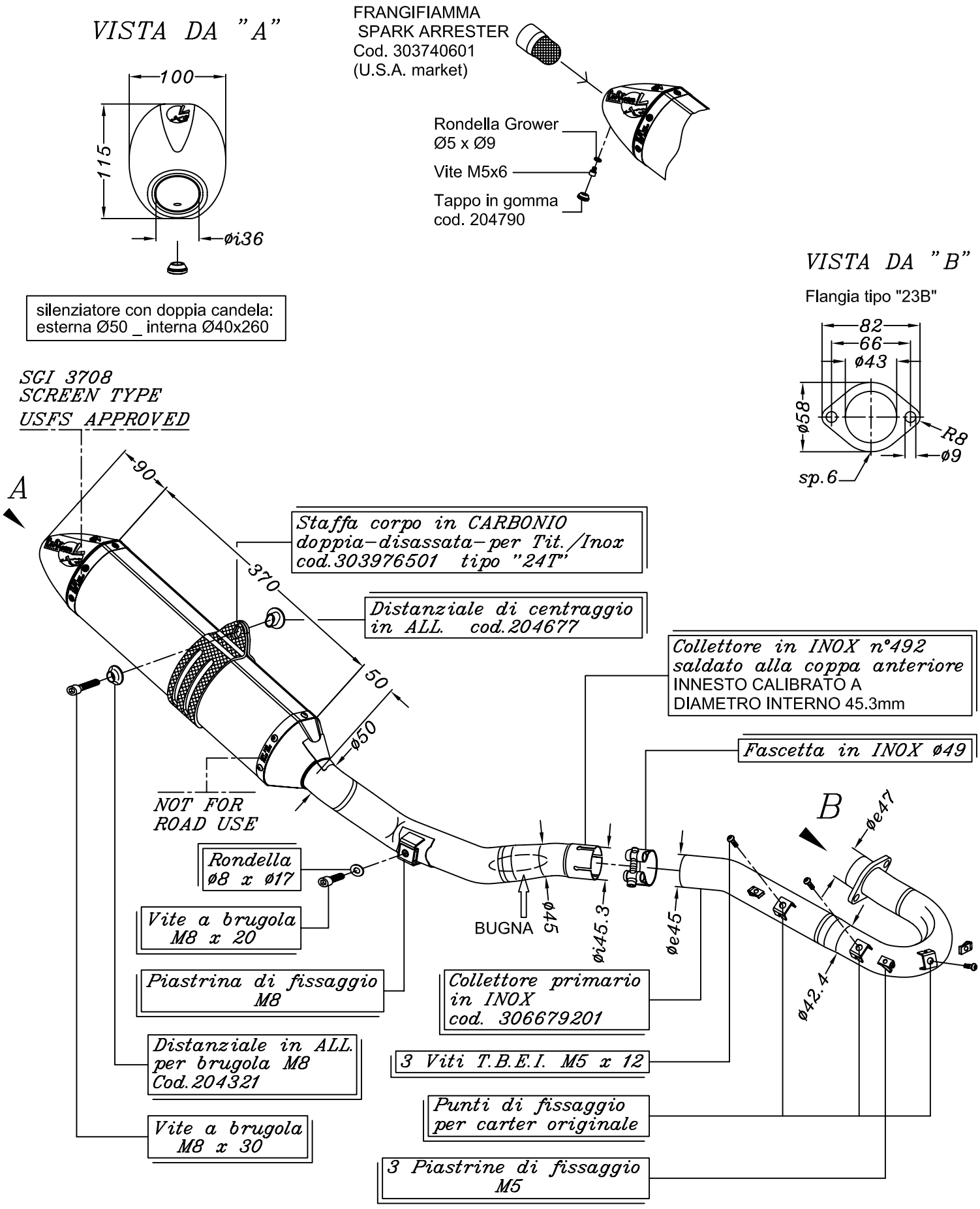

YAMAHA YZ 450 F ('07)

Art.3678C

Impianto completo <<X3>> MOTOCROSS/SUPERMOTO INOX