VISTA DA "A"

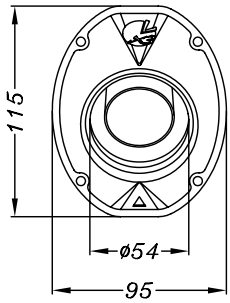

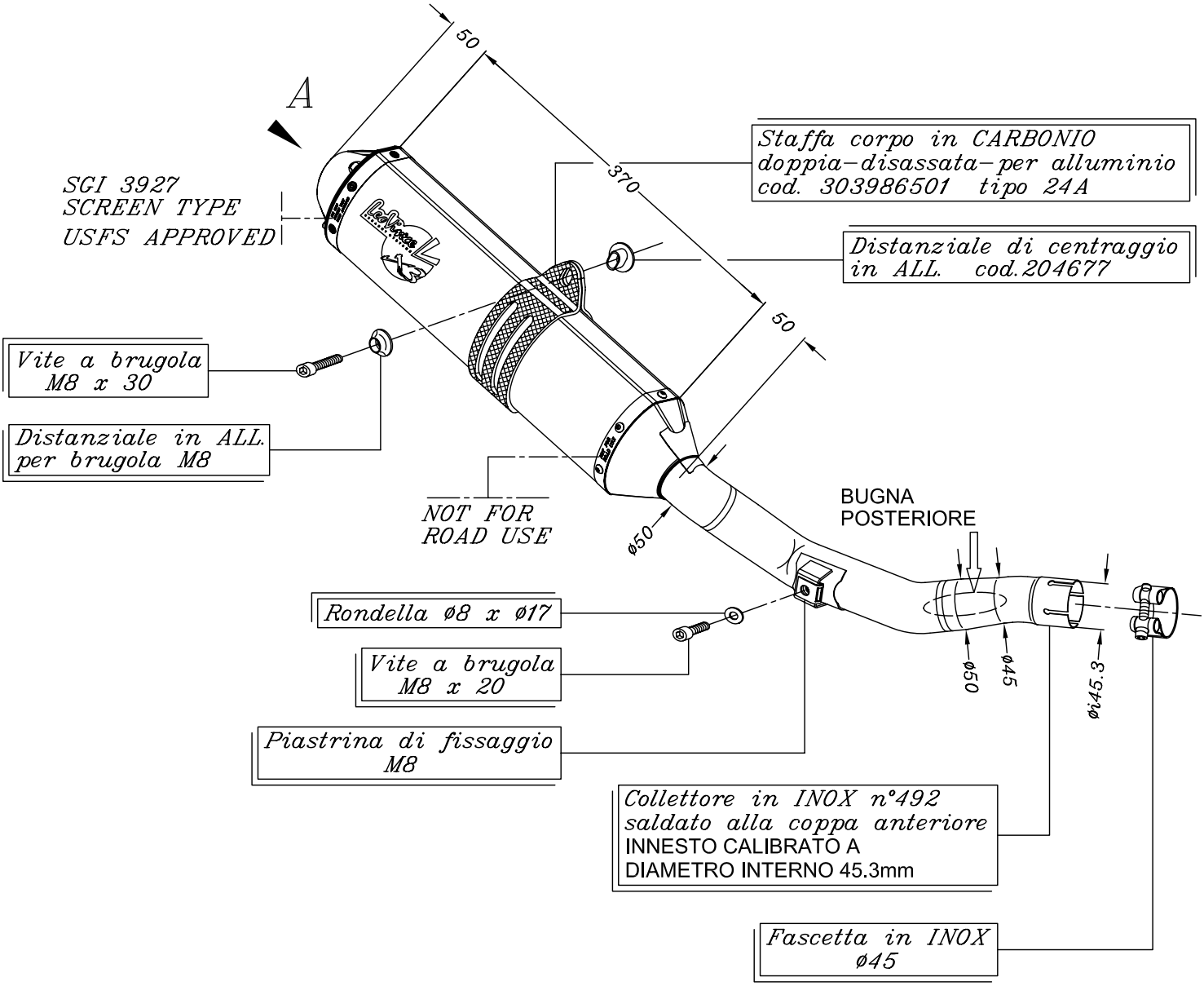

ART.3775 YAMAHA YZ 450 F ('07)

Slip-on <<X3>> MOTOCROSS/SUPERMOTO - ALLUMINIO