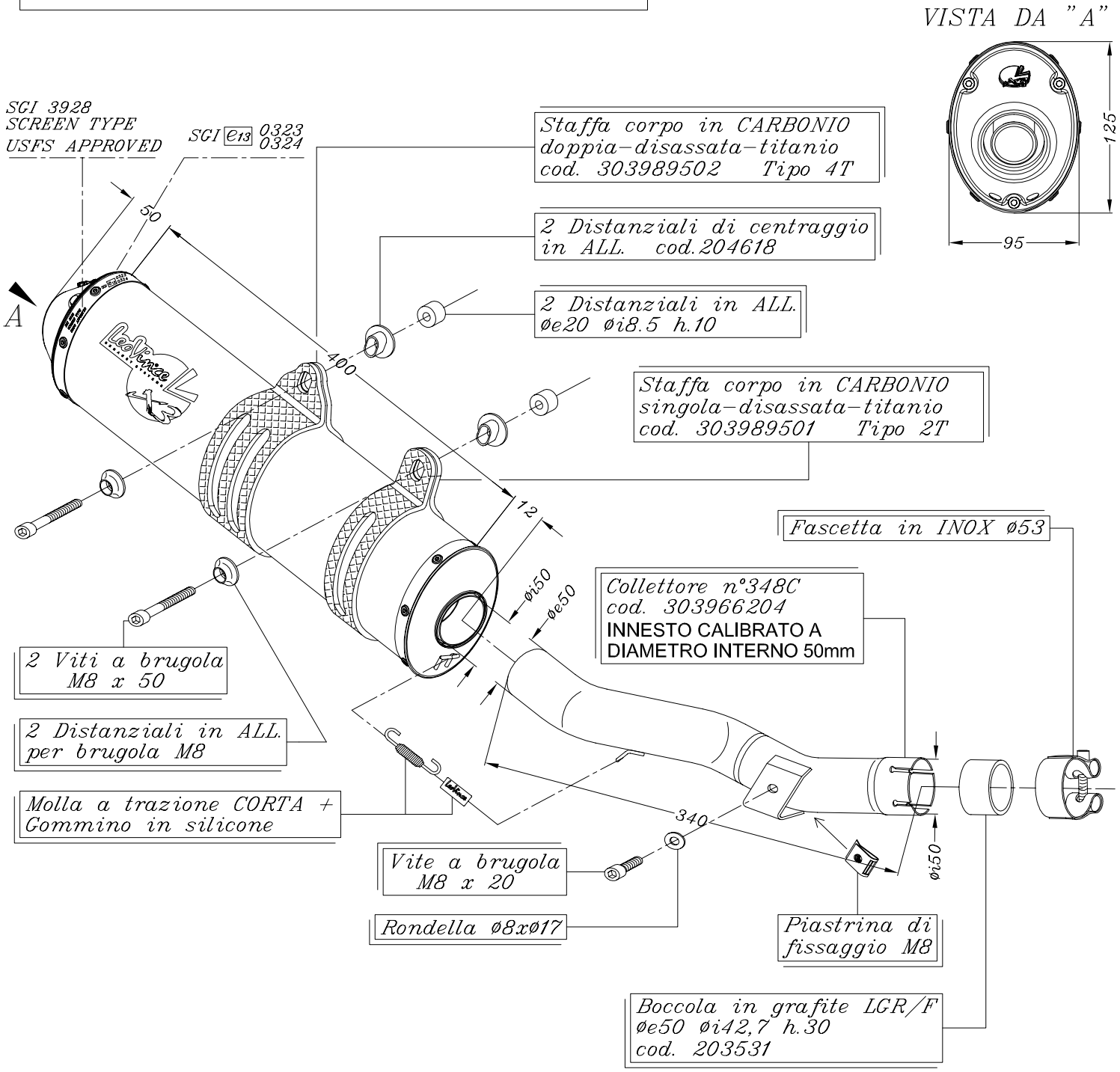

ART.3966E YAMAHA XT 600 ('95/'00)

Slip–on <<X3>> Off–road ENDURO – TITANIO