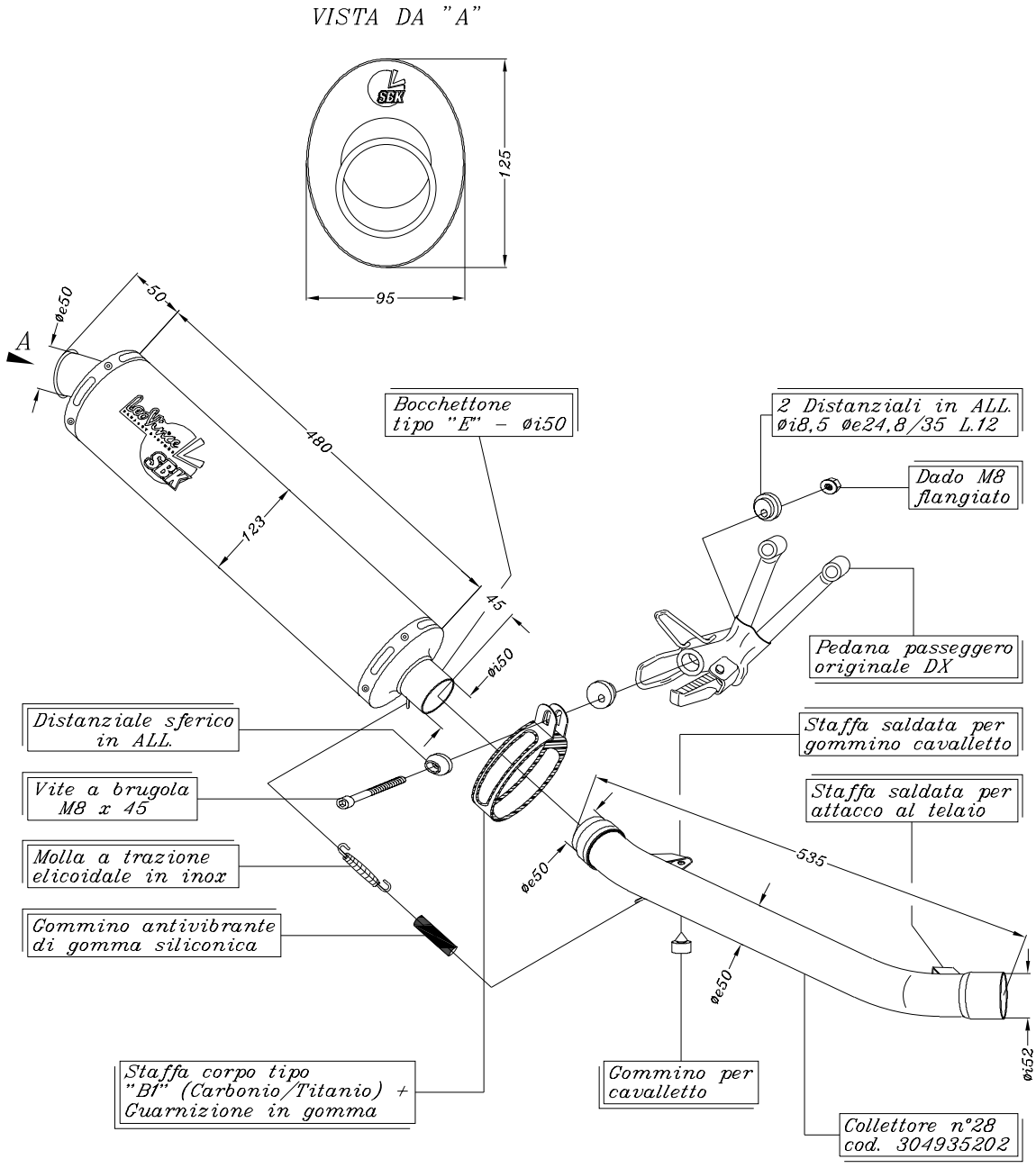

ART.4936 SUZUKI GSF 600 BANDIT ('95/'00)
SUZUKI GSF 600 BANDIT ('04)
SUZUKI GSX 750

SLIP-ON Racing – Ovale TITANIO – Passaggio BASSO