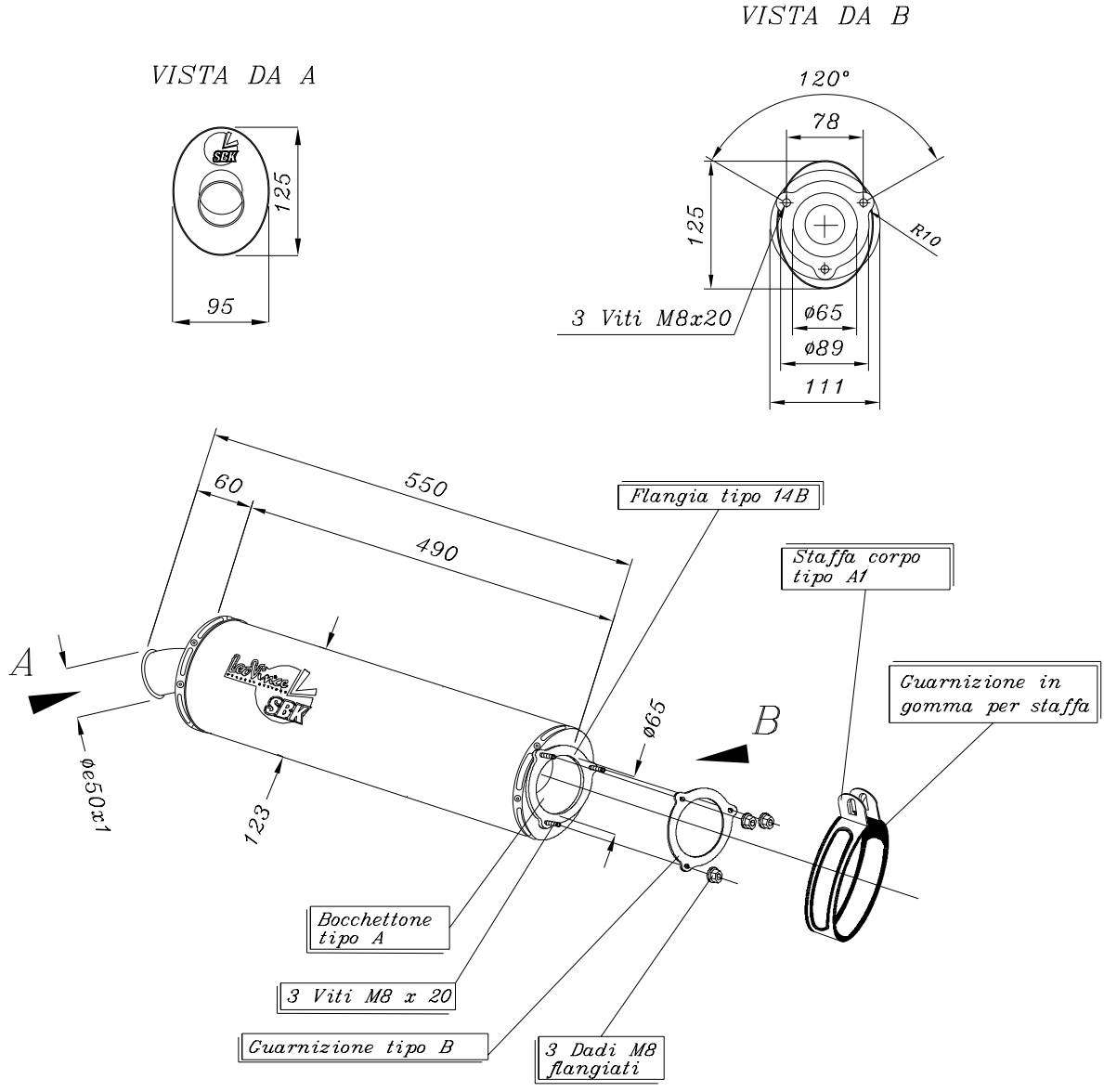

Scala approx. 1 : 6

Quote reali in millimetri

ART. 4974 HONDA CBR 900 RR ('92-'95)

BOLT-ON Alluminio ovale