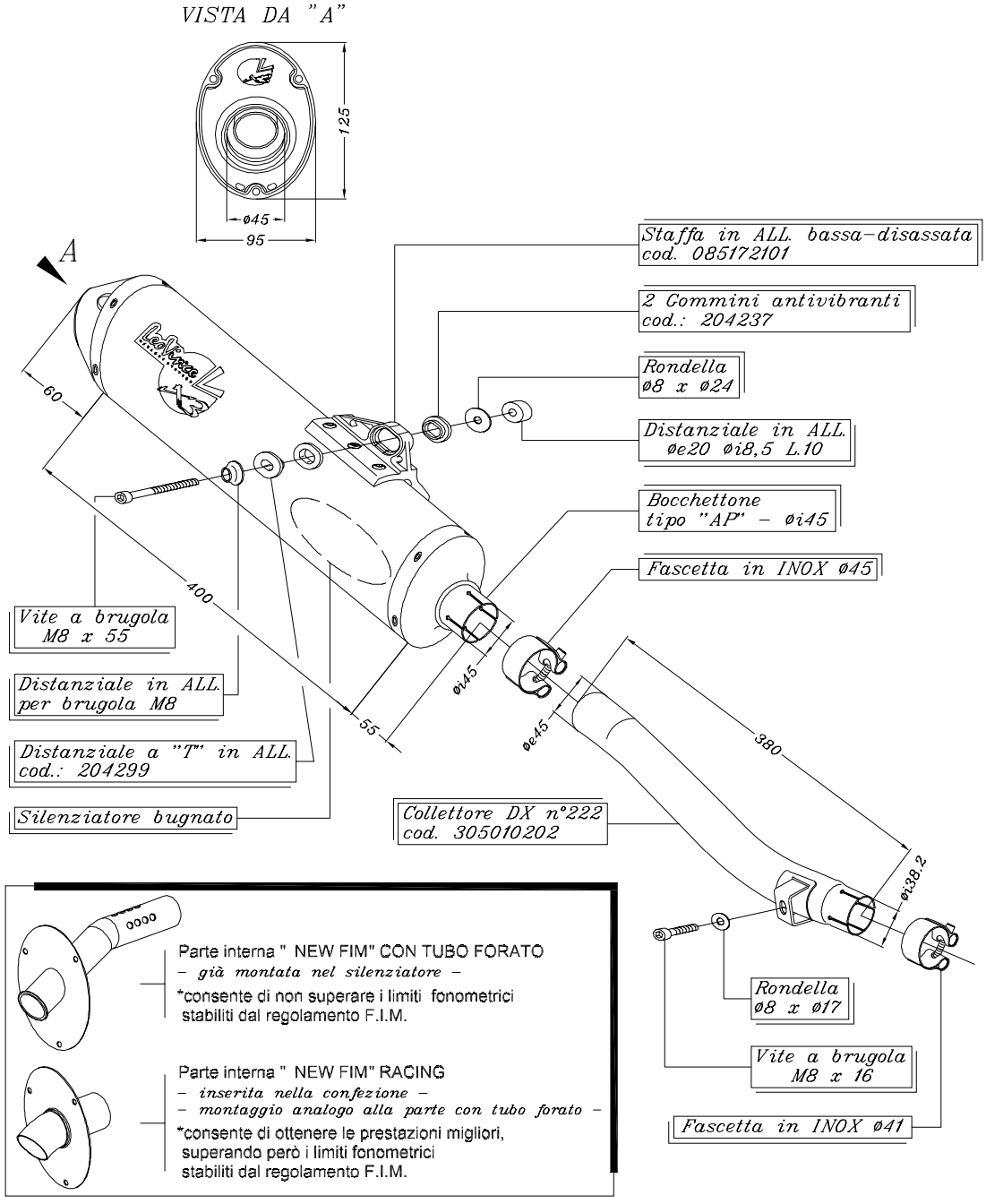

ART.5011 HONDA XR 250 R

Silenziatore <<X3>> off-road racing F.I.M. - Ovale ALLUMINIO