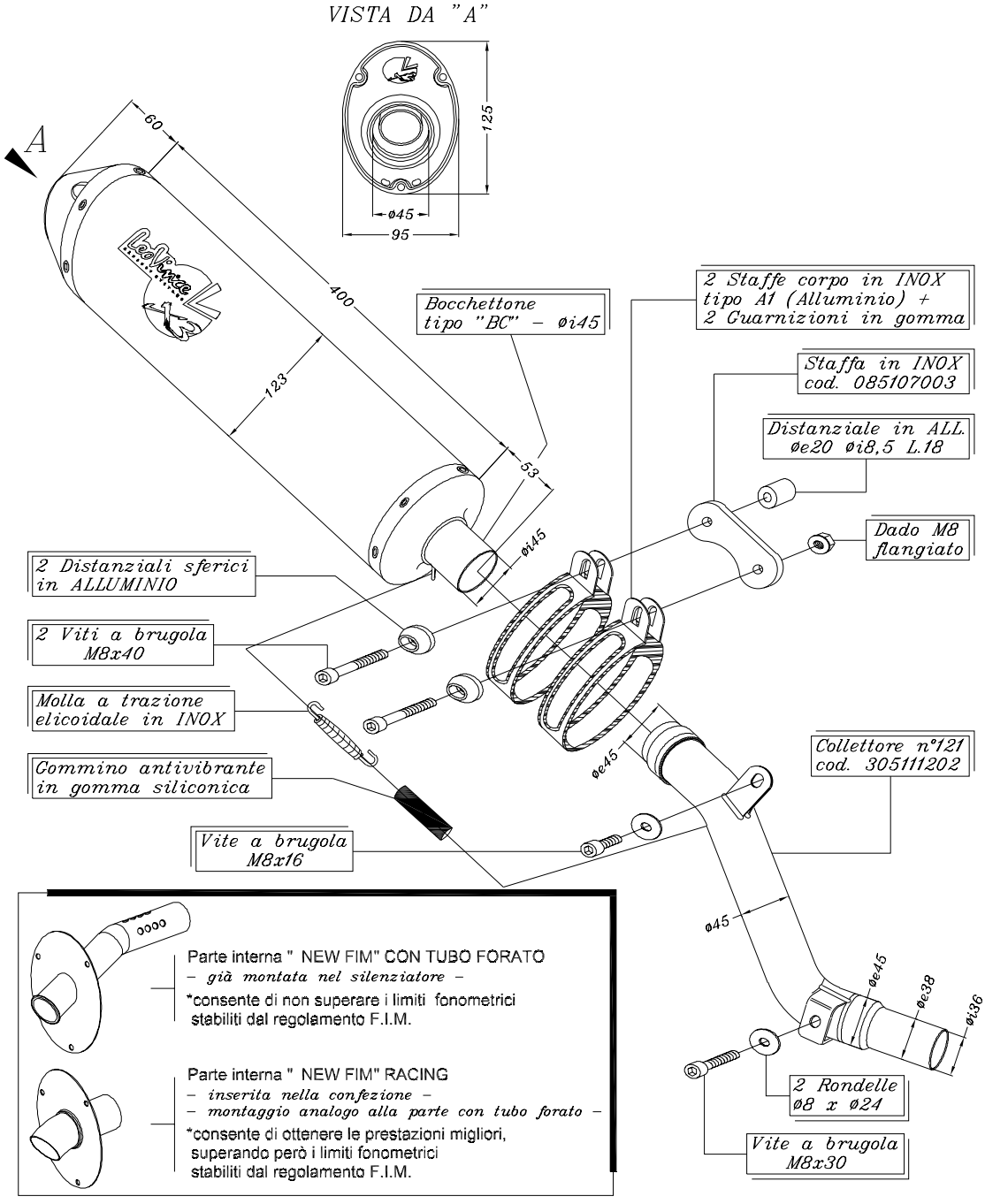

ART.5119 SUZUKI DR 650 ('96/'00)

Silenziatore <<X3>> Ovale Alluminio – Off-road Racing F.I.M.