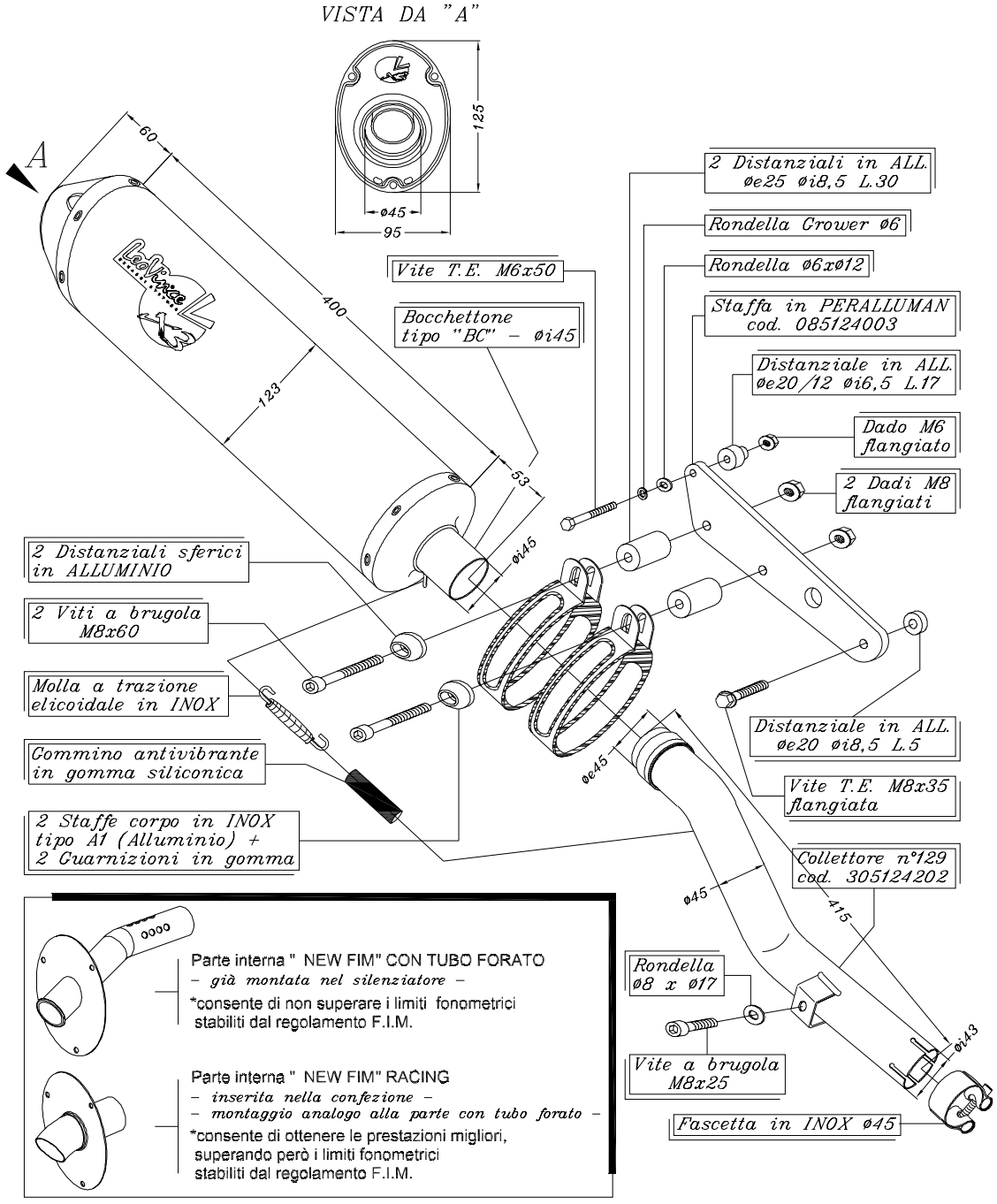

ART.5125 HONDA XR 600 R ('93/'98)

Silenziatore <<X3>> Ovale Alluminio – Off-road Racing F.I.M.