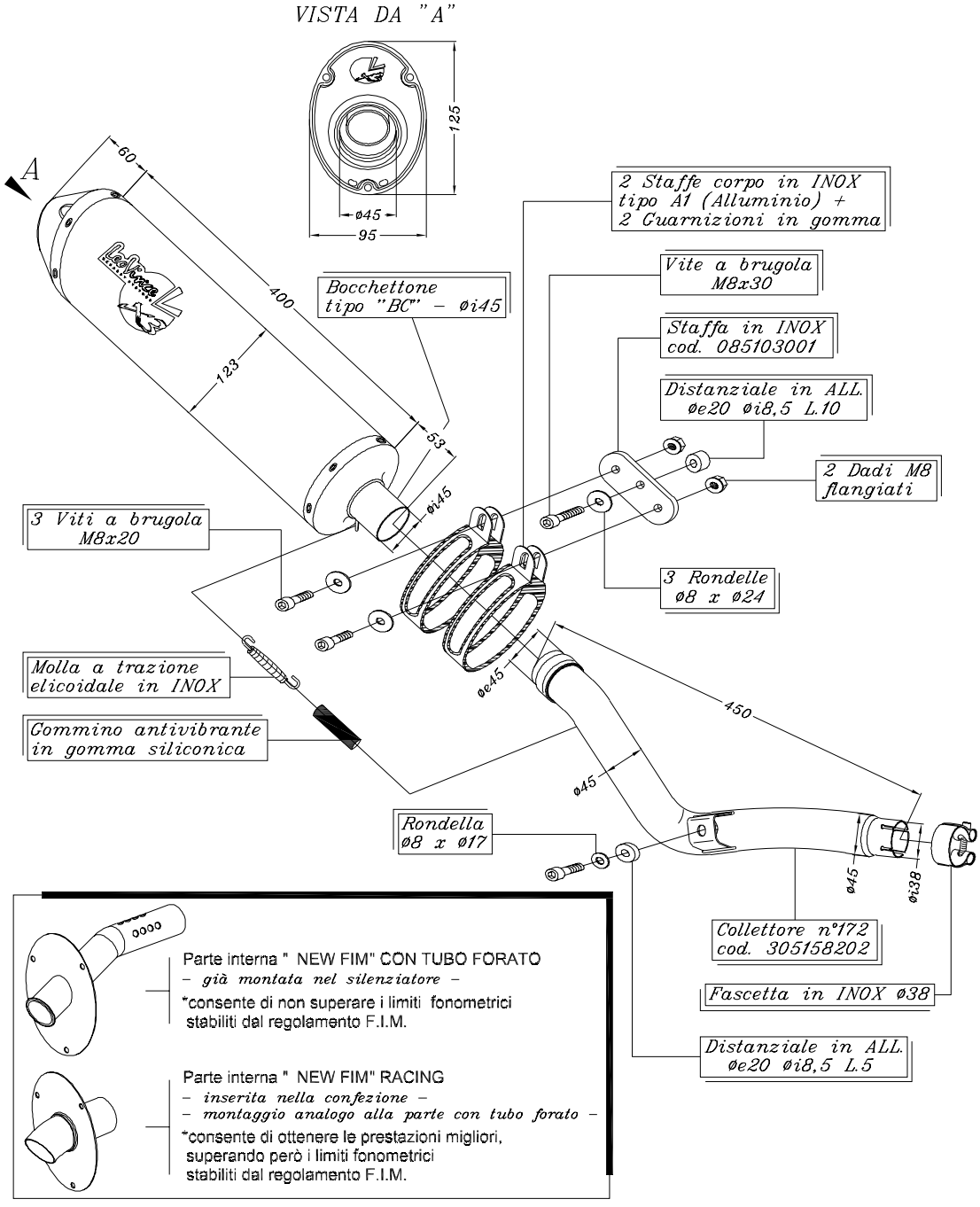

ART.5159 YAMAHA WR 250 F

Silenziatore <<X3>> Ovale Alluminio – Off-road Racing F.I.M.