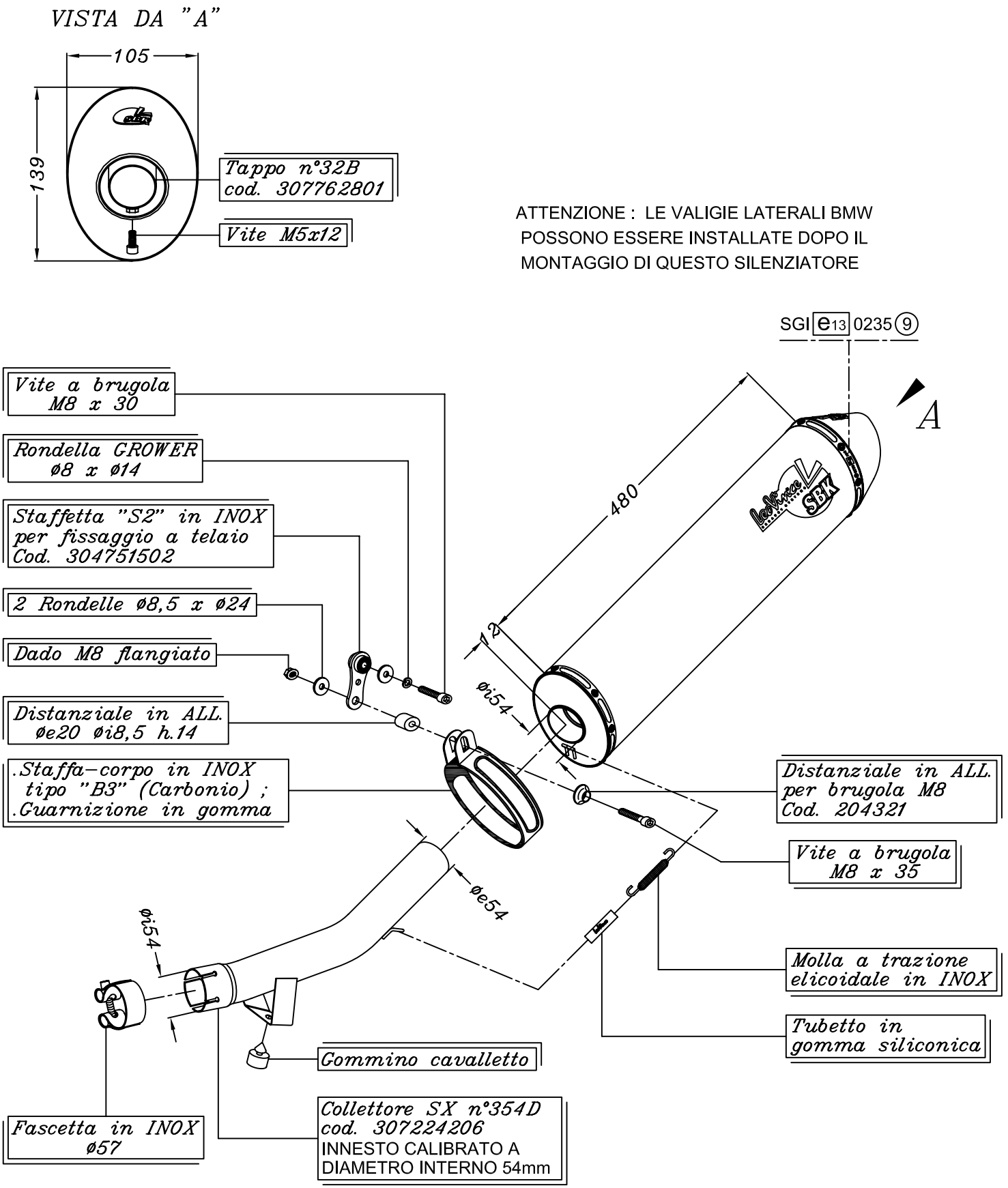

BMW R 1200 GS i.e. ('04/'05)

Art.7227A Slip-on SBK <<BIG>> Ovale - CARBONIO - Pass. STANDARD
OMOLOGATO "EVOLUTION II"