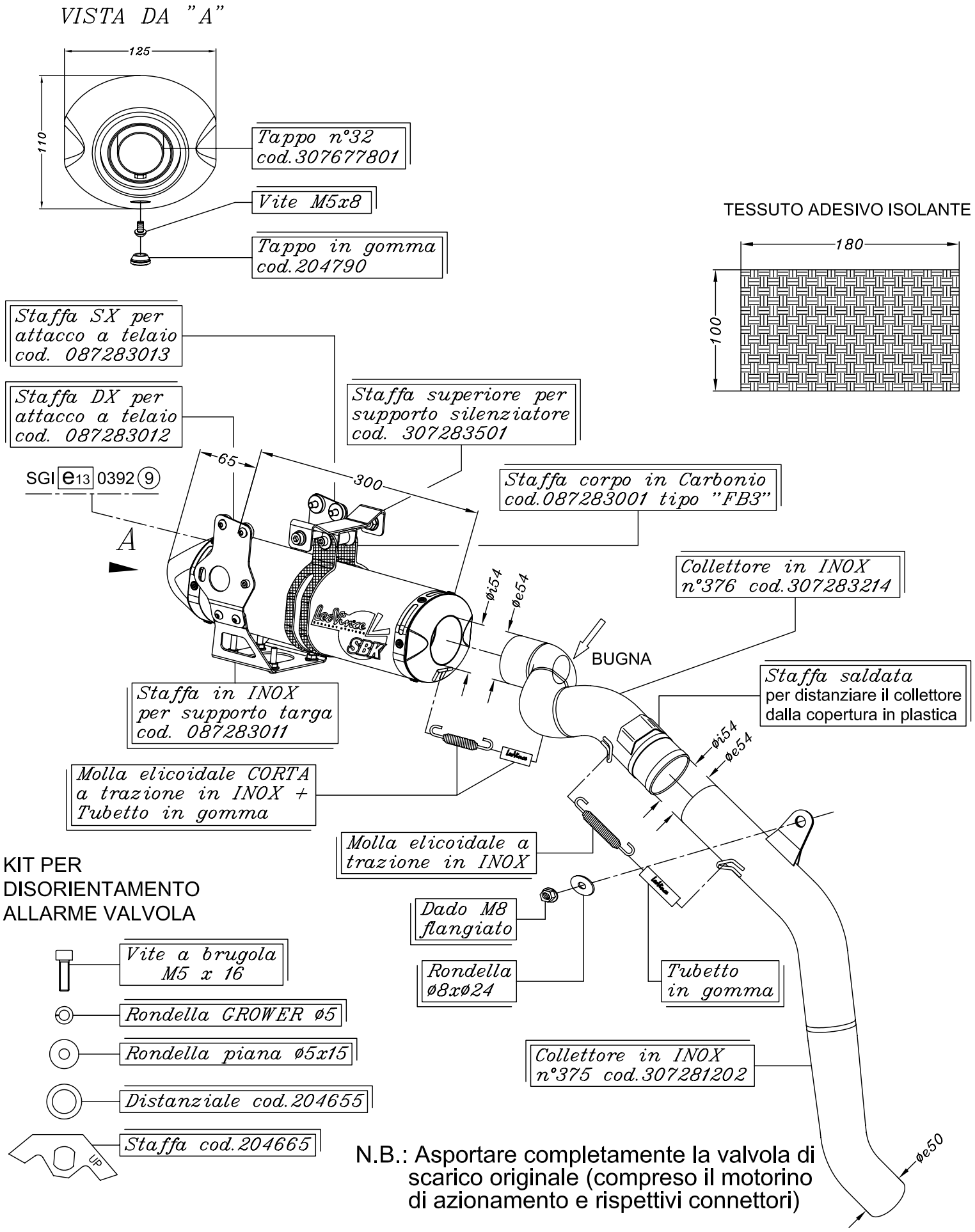

Art.7288C KAWASAKI ZX-6R 636 NINJA i.e. ('05)
KAWASAKI ZX-6RR 636 NINJA i.e. ('05)

Slip-on SBK FACTORY << BIG >> TITANIO - Passaggio STANDARD
OMOLOGATO "EVOLUTION II"