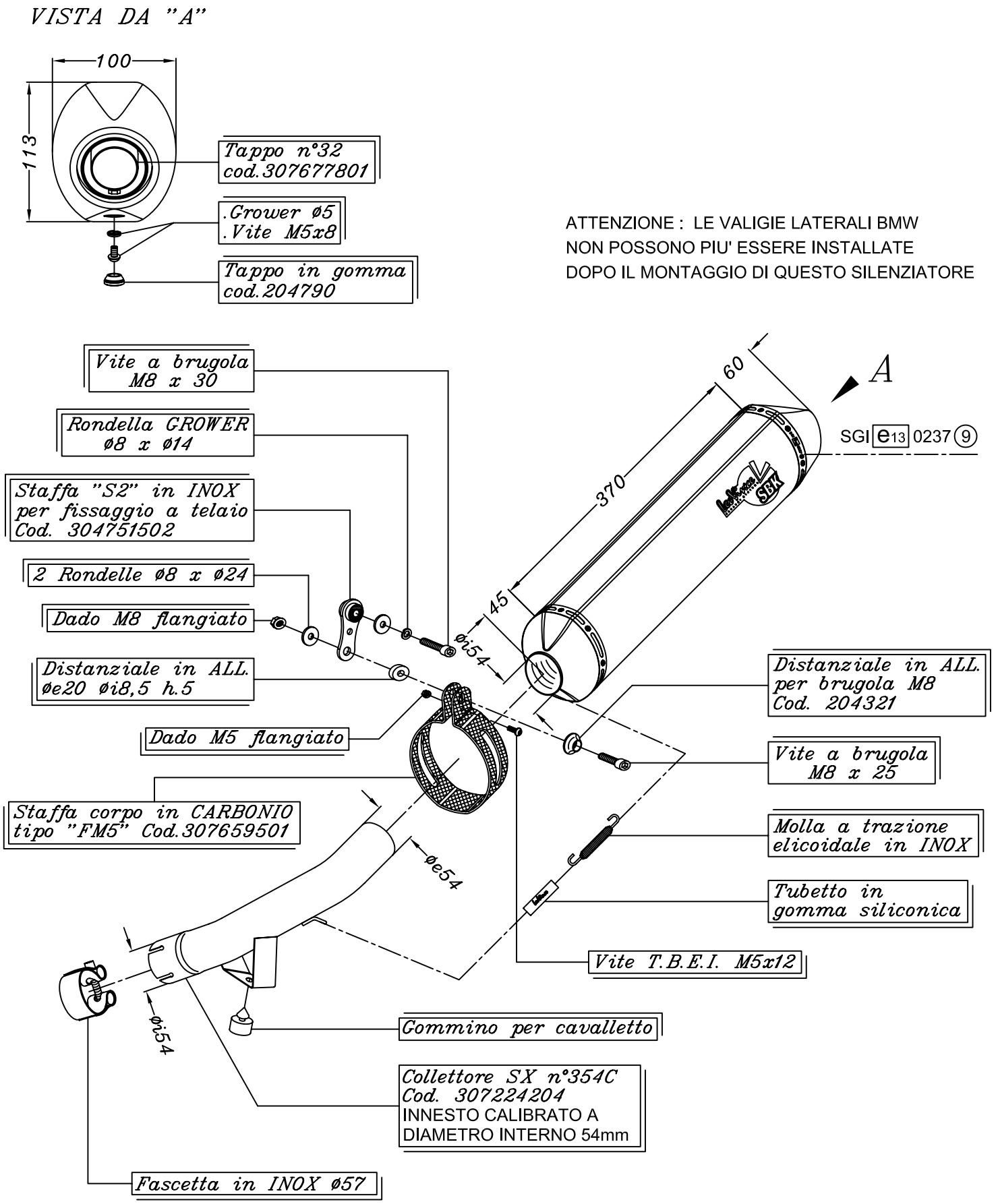

BMW R 1200 GS i.e. ('04/'05)

Art.7699C Slip-on SBK FACTORY – TITANIO – Pass. STANDARD

OMOLOGATO "EVOLUTION II"