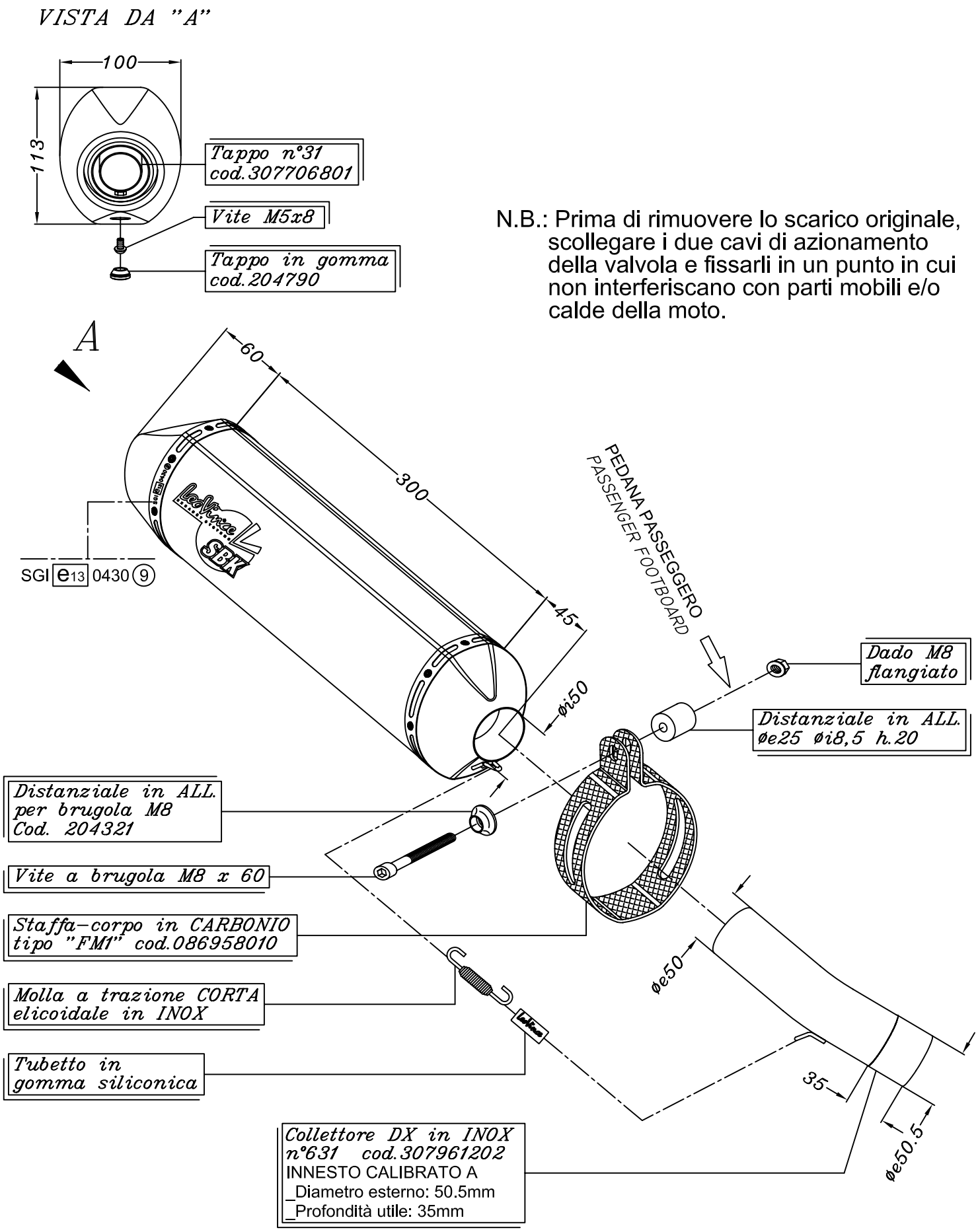

KAWASAKI ZX-10R NINJA i.e. ('08)

Art.7962 Slip-on SBK <<FACTORY>> TITANIO - Passaggio STANDARD

OMOLOGATO "EVOLUTION II"