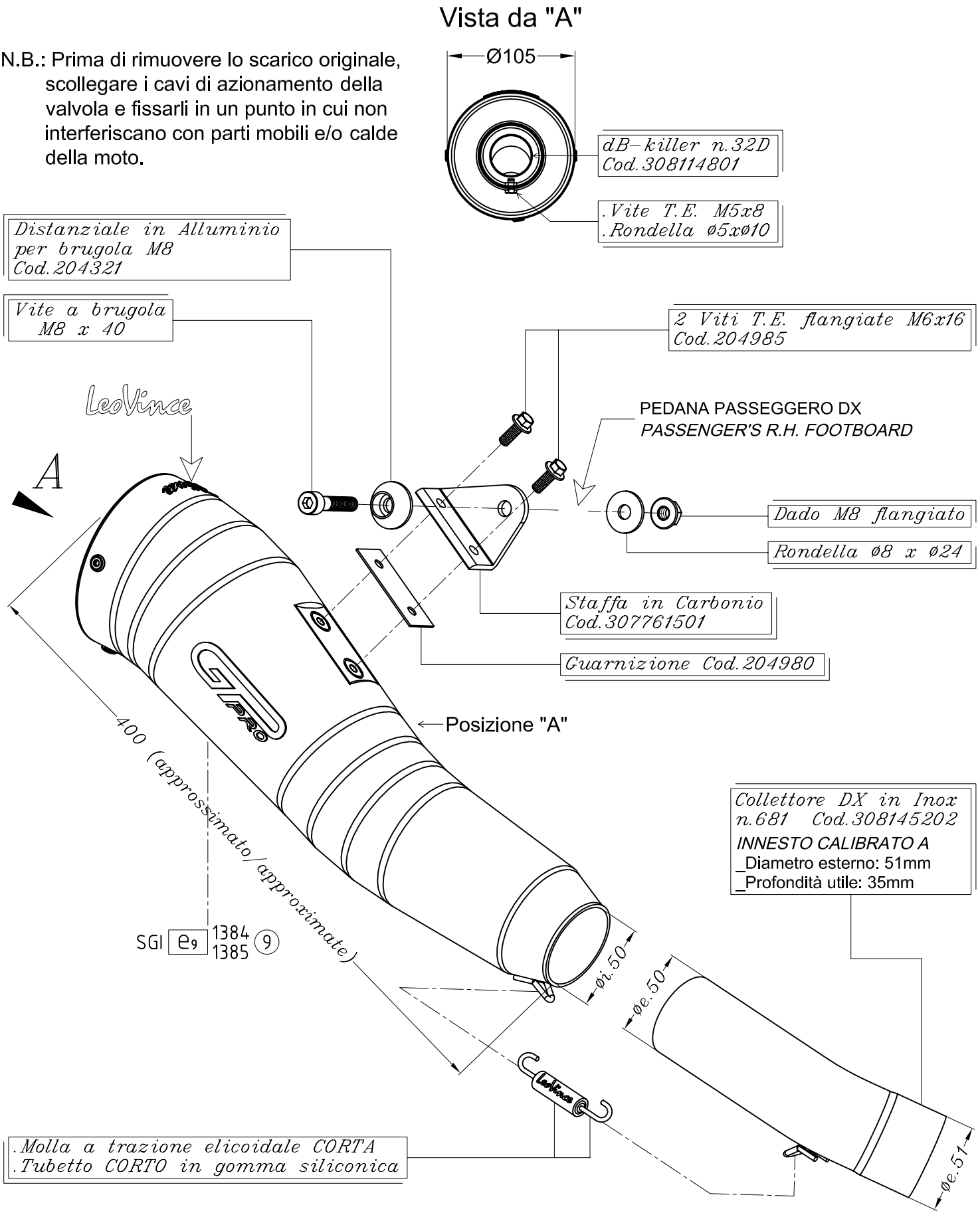

KAWASAKI ZX-10R NINJA i.e. ('08/'09)

Art.8145 Slip-on SBK GPPRO - Passaggio STANDARD

OMOLOGATO "EVOLUTION II"